Adroit Comfort Cooling Solution

RESIDENTIAL HEAT RECOVERY UNITS

WITH WATER DUCT COOLING COIL

Technical Guidelines



1. INTRODUCTION
   - 1.1 What is in the box?
   - 1.2 System description
   - 1.3 General safety instructions

2. INSTALLATION
   - 2.1 Adroit MVHR unit installation
     - 2.1.1 Adroit DV110 Models
     - 2.1.2 Adroit DV145 Models
     - 2.1.3 Adroit DV245 Models
   - 2.2 Duct water heating/cooling coil
   - 2.3 Volumiser vessel
   - 2.4 Automatic air vent
   - 2.5 Lockshield gatevalve
   - 2.6 Change the unit orientation
   - 2.7 Condensate drain

3 TECHNICAL SPECIFICATION
   - 3.1 Product technical information
   - 3.2 Product dimensions & manipulation space
   - 3.3 Wiring diagram

4 CONFIGURATION VIEW AND PARTS LIST

5 CONTROL SYSTEM

6 PRODUCT COMMISSIONING
   - 6.1 Adroit digital controller & Adroit Cloud / Adroit Home
   - 6.2 Fan speed control
   - 6.3 Ventilation modes
   - 6.4 External switches or sensors – Input settings
   - 6.5 Grant remote access

7 MAINTENANCE
   - 7.1 Filters
   - 7.2 Heat exchanger
   - 7.3 Fans
   - 7.4 Condensate drain
   - 7.5 Water coil

8 TROUBLESHOOTING

9 DECLARATION OF CONFORMITY

10 . WARRANTY

11 . DECOMMISSIONING AND DISPOSAL

1. INTRODUCTION

1.1 What is in the kit?

This kit includes the following:

✓ Adroit MVHR Unit (to be ordered separately, depending on kit size, unit orientation, Passive House requirements, etc.) x 1
✓ Adroit Digital Controller x 1
✓ NTC Temperature Sensor x 1
✓ Duct Water Coil x 1
✓ Volumiser Vessel x 1
✓ Automatic Air Vent x 1
✓ Lockshield Gate Valve x 1
✓ Technical Guidelines x 1

The specific products included in each kit, can be found below.

Adroit DV110 Comfort Cooling Kit - 90002287

Part No:	Description	Qty
90000610	Adroit digital controller	1
60000134	NTC sensor	1
90002279	Duct water cooling coil	1
90000497	200 mm to 160mm Metal connector	2
90002281	35 litre volumiser vessel	1
90002282	Automatic air vent	1
90002283	22 mm brass lockshield gate valve	1

Adroit DV145 Comfort Cooling Kit - 90002288

Part No:	Description	Qty
90000610	Adroit digital controller	1
60000134	NTC sensor	1
90002279	Duct water cooling coil	1
90002281	35 litre volumiser vessel	1
90002282	Automatic air vent	1
90002283	22 mm brass lockshield gate valve	1

Adroit DV245 Comfort Cooling Kit - 90002289

Part No:	Description	Qty
90000610	Adroit digital controller	1
60000134	NTC sensor	1
90002280	Duct water cooling coil	1
90002284	50 litre volumiser vessel	1
90002282	Automatic air vent	1
90002283	22 mm brass lockshield gate valve	1

1.2 System description

The Adroit Comfort Cooling Kits are designed to create a healthy and comfortable indoor environment through efficient cooled air movement via the Airflow Adroit mechanical ventilation with heat recovery (MVHR) units working in conjunction with a duct water coil fed via an external source (such as a heat pump).
With many years of experience in the ventilation industry, Airflow is offering these kits specifically to operate at peak efficiency levels. With over 20 MVHR products available from Airflow, the Adroit range benefit from excellent thermal efficiency and low specific fan power (SFP). The Adroit Comfort Cooling Kits are the focus in achieving an efficient, compact and economical domestic and residential ventilation with comfort cooling solution.

The Adroit Comfort Cooling is the ideal solution for applications such as flats and houses up to 300 m^2 floor area (based on achieving 1 ACH in cooling mode), new builds, renovations or retrofits.

Designed for flexibility and ease of installation, the units are suitable for vertical mounting, with all four connection spigots conveniently located at the top of the unit. They incorporate duct-mounted water-cooling coils, which not only provide effective cooling but can also be used to support comfort heating requirements.

Furthermore, this solution assists dwellings in meeting the compliance standards set out in Approved Document F, Volume 1, and Approved Document O, which addresses the issue of overheating in residential buildings.

General considerations

Sizing & Commissioning

The volumiser, coil, and valve settings must be matched to the heat pump/chiller capacity and flow rates.

Appropriate commissioning is key to avoid inefficiencies.

The dew point is the temperature to which air must be cooled to become saturated with water vapor, assuming constant air pressure and water content.

When cooled below the dew point, moisture capacity is reduced, and airborne water vapor will condense to form liquid water known as dew.

Control Strategy

When using the Adroit Cloud or a digital controller, it is important to ensure that the settings are aligned with the external heating or cooling source to enable harmonious operation.

Adroit controls include an automatic 100% modulating summer bypass and a cool recovery mode that helps maintain a comfortable indoor climate during warmer

months. When the outdoor air is hotter than both the extract air and the desired supply air temperature, the unit uses the cooler extract air to reduce the temperature of the incoming supply air. In this mode, the system is actively recovering coolness from your home to improve comfort and efficiency.

An optional Building Management System (BMS) using Modbus RTU offers a reliable control strategy. Adroit ventilation units are compatible with Modbus RTU-based building automation systems, allowing for centralised control. Up to 32 units can be connected on a single Modbus line, making it a scalable solution for larger installations.

Maintenance Access

Make sure components like the MVHR unit, air vent, duct coil and lock shieldgate valve are accessible for servicing.

1.3 General safety instructions

This chapter outlines all mandatory safety requirements for the transport, storage, installation, commissioning, operation, and maintenance of the MVHR unit. All personnel must read and understand this section before handling or operating the product.

General Safety Requirements

The unit must only be used, installed, and maintained in accordance with the official installation, user, and maintenance manuals.
Failure to follow these instructions may result in equipment damage, reduced performance, or personal injury. Warranty and guarantees are void if the product is used outside the conditions specified by the manufacturer. Only competent and suitably qualified persons may carry out installation, commissioning, or repair work.

Environmental & Storage Safety

Install the unit only in environments with temperatures between 0 °C and +40 °C and relative humidity below 80%. Where condensation may occur, pre-heat incoming outdoor air using a duct heater or equivalent device. The unit is designed exclusively for indoor installation.
The MVHR unit may only be stored in dry and clean areas at ambient temperatures above +10°C.
While in storage, the units must remain in their original and intact packaging.
During transportation, the unit must be secured against any falls, mechanical damage, water penetration and any other adverse conditions that might result in damage to the unit or its packaging. It is recommended that no packaging is removed until the unit reaches the installation point so that no damage occurs on the unit. Select an adequately sturdy position for installing the product and install it properly and securely.

Mechanical Safety

Select a structurally sound mounting location capable of supporting the full weight of the unit.
Do not operate the unit without all external panels securely fitted.
Do not touch hot surfaces during operation.
The unit must not be disassembled except by competent personnel authorised to perform repairs.

Electrical Safety

Isolate the electrical supply before performing any maintenance, inspection, or repair work.
All electrical work beyond basic maintenance must be carried out by a qualified technician.
Wear appropriate personal protective equipment, including protective gloves, during installation and servicing.

Ventilation & Commissioning Safety

This unit is designed for continuously running ventilation. Continuous ventilation is necessary to ensure a healthy indoor air quality and to always maintain the building fabric in good condition. Even with prolonged absence of residents (i.e. holiday) it is not recommended to switch off the ventilation unit since indoor contaminants are still being produced and entering the air, causing the air to get stuffy and a high possibility of moisture damage due to excess humidity during the heating season.
The ventilation system must be commissioned having the flow rates adjusted in accordance with the applicable Building Regulations to ensure an optimum and efficient ventilation within the dwelling

Cooling System Safety

The cooling system must be handled, installed, and maintained with the highest level of care to ensure safe and reliable operation. Before removing the cooling coil, the system must be made fully inoperative, and all electrical accessories must be switched off and disconnected from the main power supply.
The coil must be installed in a safe location. Do not expose to weather conditions such as rain, snow, or direct sunlight.
To prevent fire hazards, the product must not be used in environments containing flammable substances or vapours, including alcohol, insecticides, gasoline, or similar materials. Air or fumes extracted by the system must be clean and free from grease, soot, corrosive agents, or any flammable or explosive mixtures.
Installation, servicing, and repair work must only be carried out by professionally qualified personnel. All ducting downstream of the cooling coil must be securely fixed and properly insulated to prevent air leakage and condensation formation, ensuring safe and efficient system performance.
During cleaning or routine servicing, the condition of the appliance must always be checked to ensure continued safe operation.

Maintenance & Hygiene Safety

Perform all pre-start inspections before operating the unit.
Follow all maintenance procedures carefully to avoid equipment damage or personal injury.
Replace filters as required; dispose of dirty filters in a sealed container in accordance with local waste regulations.
When cleaning fans, avoid mechanical damage—use only a soft brush or vacuum cleaner.
Only use original manufacturer spare parts to maintain safety and performance.
By not following these instructions when carrying out routine maintenance of the unit may result in damage to the unit and/or injury of the operator.
Dirty filters should be placed in a sealed container and be destroyed in compliance with local solid waste procedures.
Care should be taken to not damage the fans when cleaning. It is recommended that a soft brush or vacuum cleaner to be used.



Electrical Connections

Mains supply voltages (230 V AC) are present in this equipment which may cause death or serious injury by electric shock. Only a qualified electrician or installer should connect the power supply to this unit. This unit must be correctly earthed. Do not connect any accessories or ancillaries, such as the controller or any additional sensors unless the unit is down powered and isolated from mains electricity supply.

2. INSTALLATION

2.1 Adroit MVHR Unit Installation

Installation and setup should be carried out by competent person. Electrical installations and connections must only be carried out by an electrician and according to the local regulations.

2.1.1 Adroit DV110 Models

DV110 units can be equipped with either one or two optional electric post heaters. (900W; 900W+900W)
Mounting options: Unit supplied with wall mounting bracket; optional ceiling mount available. These units can also be floor mounted if raised up to give clearance for condensate drain.

Wall Mounting

Note the following before mounting:
• Avoid mounting the unit on a hollow, echoing partition wall or on a bedroom wall. Taking sound transmission precautions is recommended.
• The minimum distance between the top of the unit and the finished ceiling surface is 30 mm.
Note that during mounting the unit rises 10 mm higher than the final height.
• It is recommended that the unit is not positioned in sound sensitive areas unless some acoustic deadening measures are taken.
Mount the DV110 on the wall with a mounting bracket, as shown in the adjacent figure. Make sure that the unit is horizontally level after mounting.
Proceed with step 1 followed by step 2.
Take into consideration the position of the unit and ensure there is adequate access for installation, operation and maintenance.

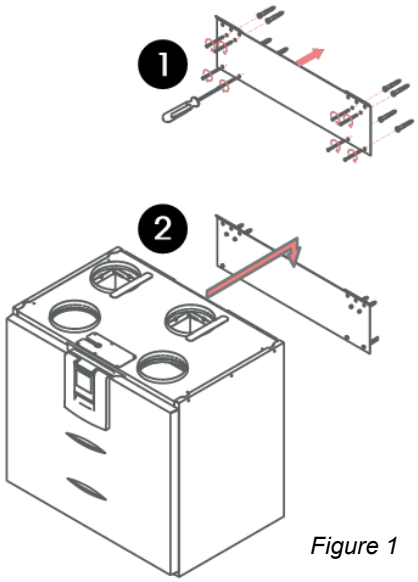

Figure 1

Ceiling Mounting Using the Ceiling Mounting Bracket

DV110 Adroit units can also be mounted vertically by using the optional ceiling mount bracket. Attach the ceiling mounting bracket:

• To the ceiling with M8 thread rods, connecting to suitable mount points that are strong enough to hold the weight of the unit.

• Horizontally level, as the plate determines the straightness of the unit. Insulate the outdoor air and exhaust air duct against condensation, as well as between the unit and the ceiling mounting bracket.

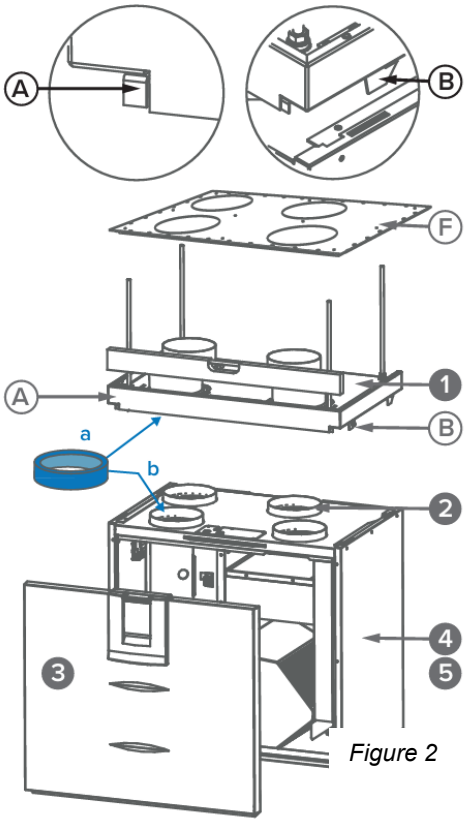

Figure 2

1. Install the ceiling mounting bracket with M8 thread bars so that it is horizontally level.
2. Install the insulation washers into the outlet collars of the ventilation unit.
3. Remove the door before installing the ventilation unit to the ceiling mounting bracket.
4. Lift the ventilation unit close to the ceiling mounting bracket and feed the cables and the connection box through the hole in the ceiling mounting bracket on top of the ceiling. 5. Where required, the unit can be detached from the ceiling mounting bracket. Remove the door of the unit. Lift the unit slightly upwards and pull simultaneously from both operating levers (A) of the ceiling mounting bracket to detach the unit from the ceiling mounting bracket.

For further details, please see the DV110 Adroit Instruction Manual, delivered with the Adroit unit or can found be online at airflow.com.

2.1.2 Adroit DV145 Models

DV145 units can be equipped with either one or two optional electric post heaters. (900W; 900W+1500W)

Mounting options: Unit supplied with wall mounting bracket, optional ceiling mount available. These units can also be floor mounted if raised up to give clearance for condensate drain.

Wall Mounting

Note the following before mounting:

• Avoid mounting the unit on a hollow, echoing partition wall or on a bedroom wall. Taking sound transmission precautions is recommended.

• The minimum distance between the top of the unit and the finished ceiling surface is 30 mm. Note that during mounting the unit rises 10 mm higher than the final height.

• It is recommended that the unit is not positioned in sound sensitive areas unless some acoustic deadening measures are taken.

Mount the DV145 on the wall with a mounting bracket, as shown in the figure 1. Make sure that the unit is horizontally level after mounting.

Floor Mounting

The DV145 unit can be mounted on the floor using the floor stand available as an optional accessory (SKU: 90000722).
Adjust the base with adjusting legs to level it. Remove the 4 rubber plugs at the bottom of the unit. Place the unit on top of the base so that the bars of the base fit in the holes at the bottom of the unit.

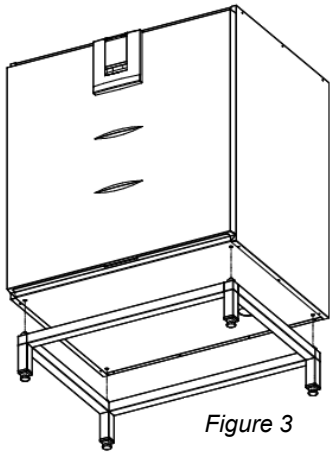

Figure 3

For further details, please see the DV145 Adroit Instruction Manual, delivered with the Adroit unit or can found be online at airflow.com.

2.1 .3 Adroit DV245 Models

DV245 units can be equipped with an optional electric 1500W post-heating resistor and an electric 1500W additional heating resistor.

Mounting options: The unit must always be installed on the floor.

Floor Mounting

The feet can be adjusted so that the unit is level.
The unit height may vary due to the adjustable feet (1226-1421mm).

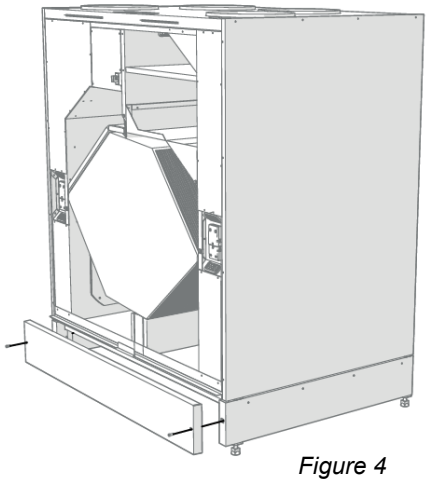

Figure 4

For further details, please see the DV110 Adroit Instruction Manual, delivered with the Adroit unit or can found be online at airflow.com.

2.2 Circular Duct Water Heater / Cooler Installation



Figure 5A

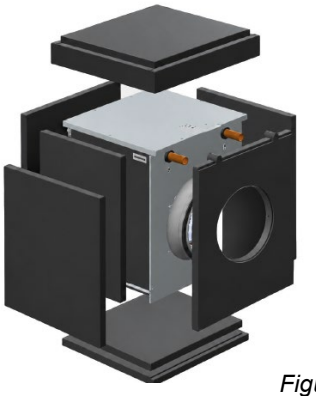

Figure 5B

The duct-mounted water coils with circular duct connections are designed to heat or cool the supply air in a mechanical ventilation system. They can also be used to provide heating or cooling to individual rooms or zones when integrated into a suitable hydronic circuit.

Note: Within the Adroit DV110 Comfort Cooling Kit, the supplied coil has Ø200 mm spigot connections, while the MVHR unit uses Ø160 mm supply air spigots. Two metal transition adaptors are therefore included to step up from Ø160 mm to Ø200 mm, ensuring correct airflow and a secure connection between the MVHR unit and the water coil.

- Water coil with 3 tube rows
- Casing of Aluzinc coated sheet steel, AZ 150
- Openable cover for inspection and cleaning
- Circular duct connections with rubber seals
- Air tightness class D to EN 15727
- Coils are used with water (0/+110°C), as well as glycol (-40/110°C)
- 4 insulated sides with 6mm of Armaflex material, ACE flexible elastomeric foam (FEF) according to EN14304

Operating Data: Water Coil

- Operating temperature range: 0/+110°C (water); -40/110°C (glycol)
- Max. operating pressure: 1,6 MPa (16 bar)
- The coils are tested for leakage (Bubble test described in the EN 1779)

Installation as a heating coil

The duct water heater can be installed in a horizontal or vertical duct, with the air flow in either direction. The heater should not be fitted too close to a fan outlet or a bend in the ducting because then there is a risk that the air flow through the heat exchanger is uneven which might result in lower efficiency. The heater is normally fitted after the fan.

Installation as a cooling coil

The duct water cooler CWC can be installed in a horizontal duct only, with the air flow in either direction, angled towards the condensate drain by up to 5°. The duct water cooler is partly insulated. A drainpipe is required to drain off any condensed water with drain connection of ½".

Note: Please ensure the coil assembly (including fittings as well as manifolds and coil housing) is insulated with a vapour tight insulation. Insulation panels kits are available as optional accessories (Figure 5B). Refer to the requirements of Part L for the minimum insulation standards applicable to ducts, pipes, and plant equipment.

2.3 Volumiser Vessel Installation

- ✓ Provides a bypass route to maintain the minimum flow rate through the heat pump.
- ✓ Promotes energy efficiency
- ✓ Prevents short cycling
- ✓ Can be used as an intermediate vessel to protect the expansion vessel membrane from excess temperatures on a solar system
- ✓ Suitable for heat pump and solar systems
- ✓ Equipped with entry and exit connections
- ✓ Complies with PED 2014/68/EU
- ✓ Insulation is not included.

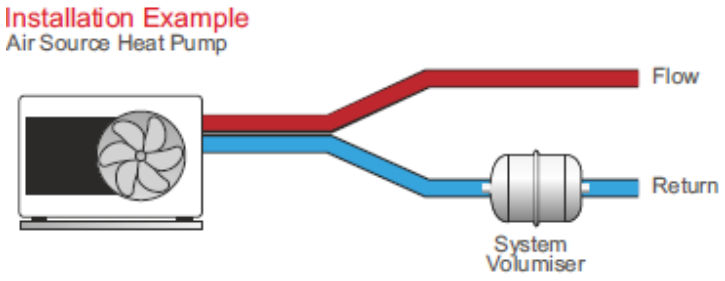

2.4 Automatic Air Vent



Technical data

- ✓ Material: brass
- ✓ Medium temperature range: 0–115 °C
- ✓ Maximum air discharge pressure: 6 bar
- ✓ Maximum working pressure: 10 bar
- ✓ WRAS approved

The presence of air in heat pump systems can be due to various causes, including air that was not expelled during filling, i.e. Air remaining in unventilated niches, at the top of heat emitters or in pipes installed with counter slopes; air drawn in from zones operating in pressure loss conditions. The air enters the system instead of leaving it through the usual air vent systems and is present in the water used to fill the system, dissolved to the level of ions and molecules. Air within systems can cause damage and problems, including partial circulation blockage, noisy radiators and circulators, corrosive effects and reduced efficiency of the radiators. It is advised to install air vents on all sealed systems involving a heat pump and heat transfer fluid. This is to remove air from the system which helps with efficiency and longevity of the system.

Automatic air vents are designed to remove the air that accumulates in heating and air conditioning systems without the need of manual intervention. Maintenance operations could be simplified thanks to the automatic shut-off valve by shutting the water flow off when the valve is removed and allow easy inspection of the air vent device. They prevent harmful phenomena that may compromise the life and performance of heating/cooling systems. They are installed in vertical position, on air separators, on hydraulic separators, on manifolds, on risers and generally in parts of the system where a concentration of air pockets is expected.

To avoid these issues, the automatic air vent (part number: 90002282) must always be installed at a high point, upright, and where air naturally collects - typically on the heat-pump's flow outlet, on top of a hydraulic separator, or at the highest point of the coil circuit. The goal is to continuously purge micro-bubbles and trapped air to protect the pump, improve heat transfer, and prevent noise.

2.5 Gatevalve Lockshield

The lock shield gate valve/flow setter is dependent on multiple factors for example system size. It's to allow the water to flow through the coil at the correct rate so that the correct amount of heat is transferred. Each system will require a different flow setting to meet its needs. A lockshield gate valve s typically installed on the return pipe from the water coil, just before it re-enters the heat pump. This location gives ensures a stable, accurate control of the flow rate through the coil.

The brass lockshield gate valve (part number: 90002283) is suitable for hot and cold-water systems.

- Manufactured to BS 5154/B
- Designed for jointing copper tube to BS EN 1057 and up to 28 mm with tectite Cross-linked polyethylene (PEX) or PEX pipe with liner to BS 7291 part 3
- Polybutylene pipe with liner to BS 7291 part 2
- XPress carbon system tube and carbon steel tube to EN10305-2 and tectite 316 system tube or stainless steel to EN 10312



2.6 Changing the unit orientation

The unit are delivered with either right- or left-hand orientation, depending on the unit part number. The unit orientation cannot be changed on site.

Part Number	Product Description
90001267	DV110 (R) ADROIT (INTEGRAL CO2 SENSOR)
90001267EPH	DV110 (R) ADROIT EPH (INTEGRAL CO2 SENSOR)
90001268	DV110 (L) ADROIT (INTEGRAL CO2 SENSOR)
90001268EPH	DV110 (L) ADROIT EPH (INTEGRAL CO2 SENSOR)
90001269	DV145 (R) ADROIT (INTEGRAL CO2 SENSOR)
90001269EPH	DV145 (R) ADROIT EPH (INTEGRAL CO2 SENSOR)
90001270	DV145 (L) ADROIT (INTEGRAL CO2 SENSOR)
90001270EPH	DV145 (L) ADROIT EPH (INTEGRAL CO2 SENSOR)
90001271	DV245 (R) ADROIT (INTEGRAL CO2 SENSOR)
90001271EPH	DV245 (R) ADROIT EPH (INTEGRAL CO2 SENSOR)
90001272	DV245 (L) ADROIT (INTEGRAL CO2 SENSOR)
90001272EPH	DV245 (L) ADROIT EPH (INTEGRAL CO2 SENSOR)

2.6 Condensate drain

Adroit MVHR Condensate Drain

In the heating season, the extract air humidity condenses into water. Water formation may be abundant in new buildings, or if the ventilation is low, compared to the humidity production of residents.

The condensate water should be drained out of the unit (without obstruction), to prevent water damage inside heat recovery unit and ductwork system.

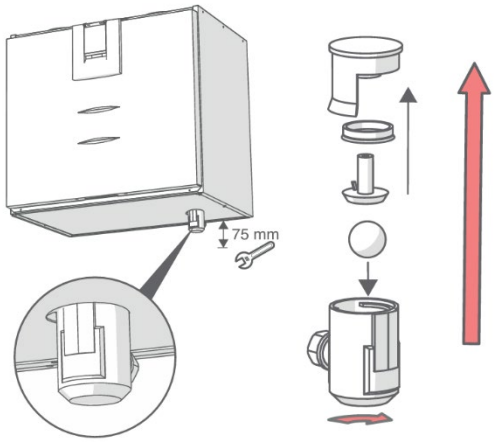

Figure 6

Check in conjunction with maintenance, for example, during the autumn before the heating season begins, that the condensate collection tray positioned inside the unit at its base is not clogged and that there is no leakage. You can check it by pouring a little water into the condensate collection tray positioned inside the unit at its base. Clean, if necessary. Water must not be allowed to enter the electrical system.

Please note that the DV245 models have two condensate outlets, therefore two drains should be fitted. The Adroit units are delivered with the condensate drain kits in the box.

Duct Water Coil Condensate Drain

The duct water coil is supplied with a stainless-steel drip tray for condensate collection, with ½" drain connection. The unit should be tilted up to 5° towards the drain; tilting it away prevents drainage and can cause damage.

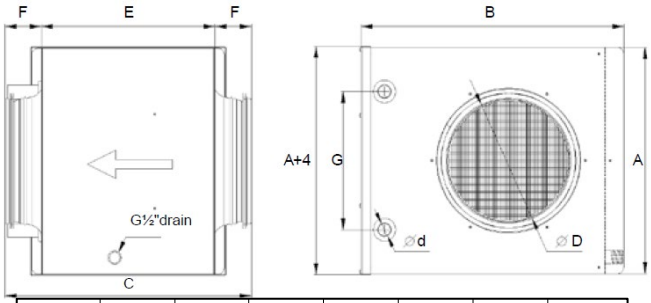

Ø D(mm)	A(mm)	B(mm)	C(mm)	E(mm)	F(mm)	G(mm)	Ø d(mm)
200	360	415	397	277	60	220	22
Ø D(mm)	A(mm)	B(mm)	C(mm)	E(mm)	F(mm)	G(mm)	Ø d(mm)
250	360	415	417	277	70	220	22

Figure 7

Note: The MVHR condensate drain must discharge to foul water and must not be connected to the coil condensate drain. MVHR condensate contains moisture extracted from internal air and may carry biological or chemical contaminants.

The coil condensate must be drained separately, using its own dry trap or non-return device to prevent pressure bypassing and to avoid cross-contamination between supply and extract systems.

3 TECHNICAL SPECIFICATION

3.1 Product technical information

Comfort cooling kit description	Adroit DV110 Comfort Cooling Kit	Adroit DV145 Comfort Cooling Kit	Adroit DV245 Comfort Cooling Kit
Part number	**90002287**	**90002288**	**90002289**
Max air flow (m3/h) / (l/s) at 100Pa	**389 / 108**	**576 / 160**	**976 / 271**
Max cooling capacity (kW) *	**3.2**	**5.1**	**6.9**
EAN	**5019009338699**	**5019009338644**	**5019009338651**
Specification	**Adroit DV110 MVHR Unit**	**Adroit DV145 MVHR Unit**	**Adroit DV245 MVHR Unit**
MVHR suitable for dwellings up to m2	170	250	400
Comfort cooling kit designed at 1ACH, ~50% fan speed, for dwellings up to m2	75	120	165
Max air flow (m3/h) / (l/s) at 100Pa	389 / 108	576 / 160	976 / 271
Thermal efficiency (%)	Over 90		
Heat exchanger	Cross-Counter-Flow (Plastic)		Cross-Counter-Flow (Aluminium)
Fans	EC		
Summer by-pass damper	100% automatic		
Integral humidity sensor (RH %)	0 - 100		
Integral CO2 sensor (ppm)	500 - 2000		
Frost protection (optional heater)	Smart Frost Protection Strategy		
Controls	Digital - 4 Profiles, 100% adjustable		
Connection to BMS	Modbus / KNX optional		
Mounting	Wall / Ceiling	Wall / Floor	Floor
Sound pressure level @3m (dB(A))	23	26	24.5
Duct diameter (mm)	160 (4 ports)	200 (4 ports)	250 (4 ports)
Condensate discharge	3/4 BSP	3/4 BSP	3/4 BSP
Electrical supply	230V / 1ph / 50Hz	230V / 1ph / 50Hz	230V / 1ph / 50Hz
Electrical power input at max flow (W)	226	302	328
Filter Class**	2x ISO Coarse > 75% (G4) and 1x ISO ePM1 50% (F7)		
Built-in electric post-heater (optional) (W)	900	2400 (900 + 1500)	3000 (2 x 1500)
Protection class	IP34	IP34	IP34
Casing insulation (mm)	20	20	20
Weight (kg)	58	76	181
Dimensions (L x D x H) (mm)	638 x 472 x 678	717 x 578 x 748	1038 x 773 x 1226-1241
Duct entry	Top Entry	Top Entry	Top Entry
Versions available:			
Right Hand:	90001267	90001269	90001271
With optional electric post-heater:	90001267EPH	90001269EPH	90001271EPH

Left Hand:	90001268	90001270	90001272
With optional electric post-heater:	90001268EPH	90001270EPH	90001272EPH
Specification	**Duct water cooling coil (CWC 200-3)**	**Duct water cooling coil (CWC 200-3)**	**Duct water cooling coil (CWC 250-3)**
Category	Water cooler/heater circular	Water cooler/heater circular	Water cooler/heater circular
Type	3 rows	3 rows	3 rows
Connection (mm)	22	22	22
Air tightness class	D	D	D
Diameter (mm)	200	200	250
Exchanger length (mm)	280	280	280
Exchanger height (mm)	325	325	325
Exchanger weight (kg)	5	5	5
Coil Casing Width (mm)	415	415	415
Coil Casing Height (mm)	360	360	360
Coil Casing Depth (mm)	397	397	417
Weight (kg)	8	8	8
Specification	**Hydraulic kit**	**Hydraulic kit**	**Hydraulic kit**
Volumiser vessel capacity (L)	35	35	50
Max. water pressure (bar) ***	3	3	3
Volumiser operating temperature	-10°C to 120°C	-10°C to 120°C	-10°C to 120°C
Automatic air vent type	15mm 6 Bar	15mm 6 Bar	15mm 6 Bar
Lockshield gate valve type	22mm brass	22mm brass	22mm brass

**Cooling capacity may vary depending on outdoor and indoor temperature and relative humidity conditions.*
***Complies with ISO 16890.*
**** Max. pressure 3 bar / 0,3 MPa. Correctly sized pipes should be used for installation.*
The relevant standards and regulations must be followed.

3.2 Product dimensions & manipulation space

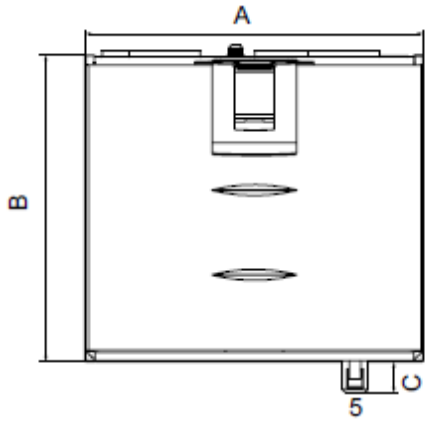

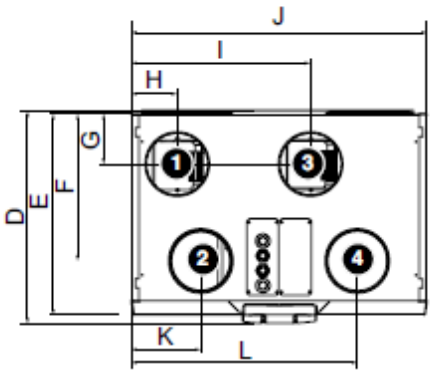

Duct outlets, model R

Inner diameter of female outlet collar ø 160 mm

1. Supply air to dwelling
2. Extract air from dwelling to unit
3. Exhaust air out
4. Outdoor air to unit
5. Condensate drain

Duct outlets, model L

Inner diameter of female outlet collar ø160 mm

1. Exhaust air out
2. Outdoor air to unit
3. Supply air to dwelling
4. Extract air from dwelling to unit
5. Condensate drain

+ excludes motors. Motor warranty one year from date of purchase

Model	A	B	C	D	E	F	G	H	I	J	K	L
DV110	638	678	42	472	455	325	111	112	390	638	160	478

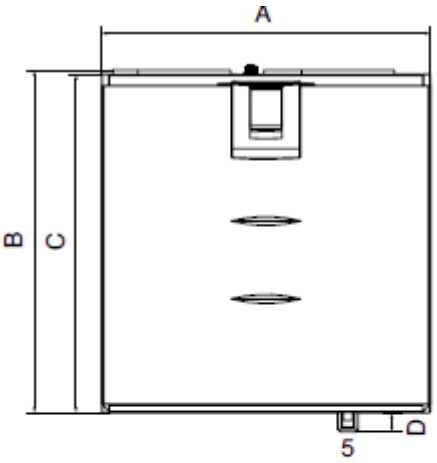

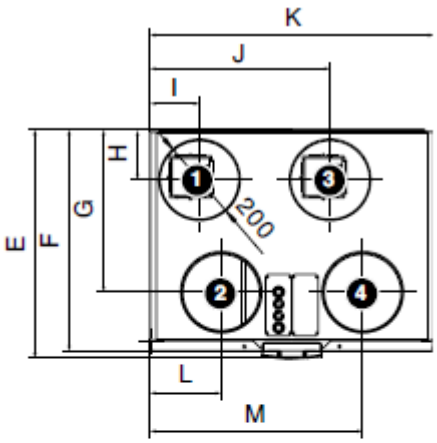

Duct outlets, model R

Inner diameter of female outlet collar ø200 mm

1. Supply air to dwelling
2. Extract air from dwelling to unit
3. Exhaust air out
4. Outdoor air to unit
5. Condensate drain

Duct outlets, model L

Inner diameter of female outlet collar ø200 mm

1. Exhaust air out
2. Outdoor air to unit
3. Supply air to dwelling
4. Extract air from dwelling to unit
5. Condensate drain

+ excludes motors. Motor warranty one year from date of purchase

Model	A	B	C	D	E	F	G	H	I	J	K	L	M
DV145	717	748	739	43	578	560	411	127	125	455	717	180	537

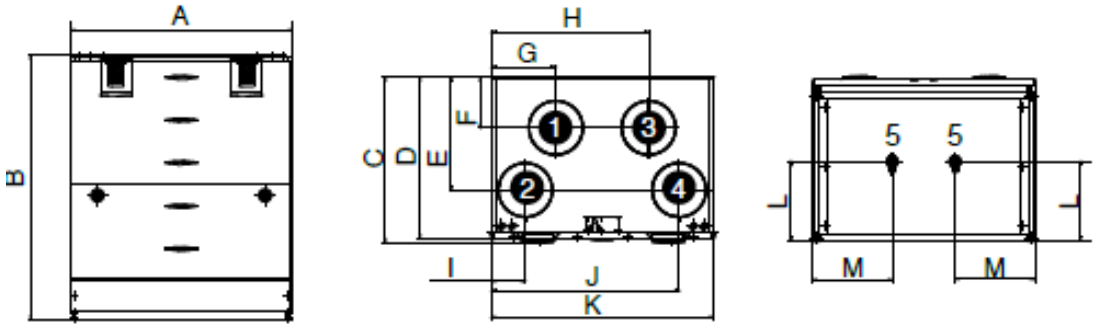

Duct outlets, Model R

Inner diameter of the female collar: 250 mm

1.Extract air from the apartment to the unit
2.Supply air from the unit to the apartment
3.Outdoor air to the unit
4.Exhaust air flowing outdoors from the unit

Duct outlets, Model L

Inner diameter of the female collar: 250 mm

1.Outdoor air to the unit
2.Exhaust air flowing outdoors from the unit
3.Extract air from the apartment to the unit
4.Supply air from the unit to the apartment

+ excludes motors. Motor warranty one year from date of purchase

Model	A	B	C	D	E	F	G
DV245	1038	1226-1421**	773	754	528	237	301
	H	I	J	K	L	M	
	735	158	878	1038	373	371	

**Adjustable feet

- ✓ All figures are measured in mm.
- ✓ A clear space must be ensured in front of the unit for service and maintenance purposes.
  - DV110 Adroit: min 450 mm
  - DV145 Adroit: min 550 mm
  - DV245 Adroit: min 800 mm
- ✓ If fitted in a cupboard, adequate lighting should be ensured to allow for servicing the unit.
- ✓ Please note that the unit label which contains important information such as serial number, product model and manufacturing date, is located inside of the unit. This label should be easy to access.
- ✓ For the duct water coil dimensions, see figure 7.

3.3 Wiring diagram

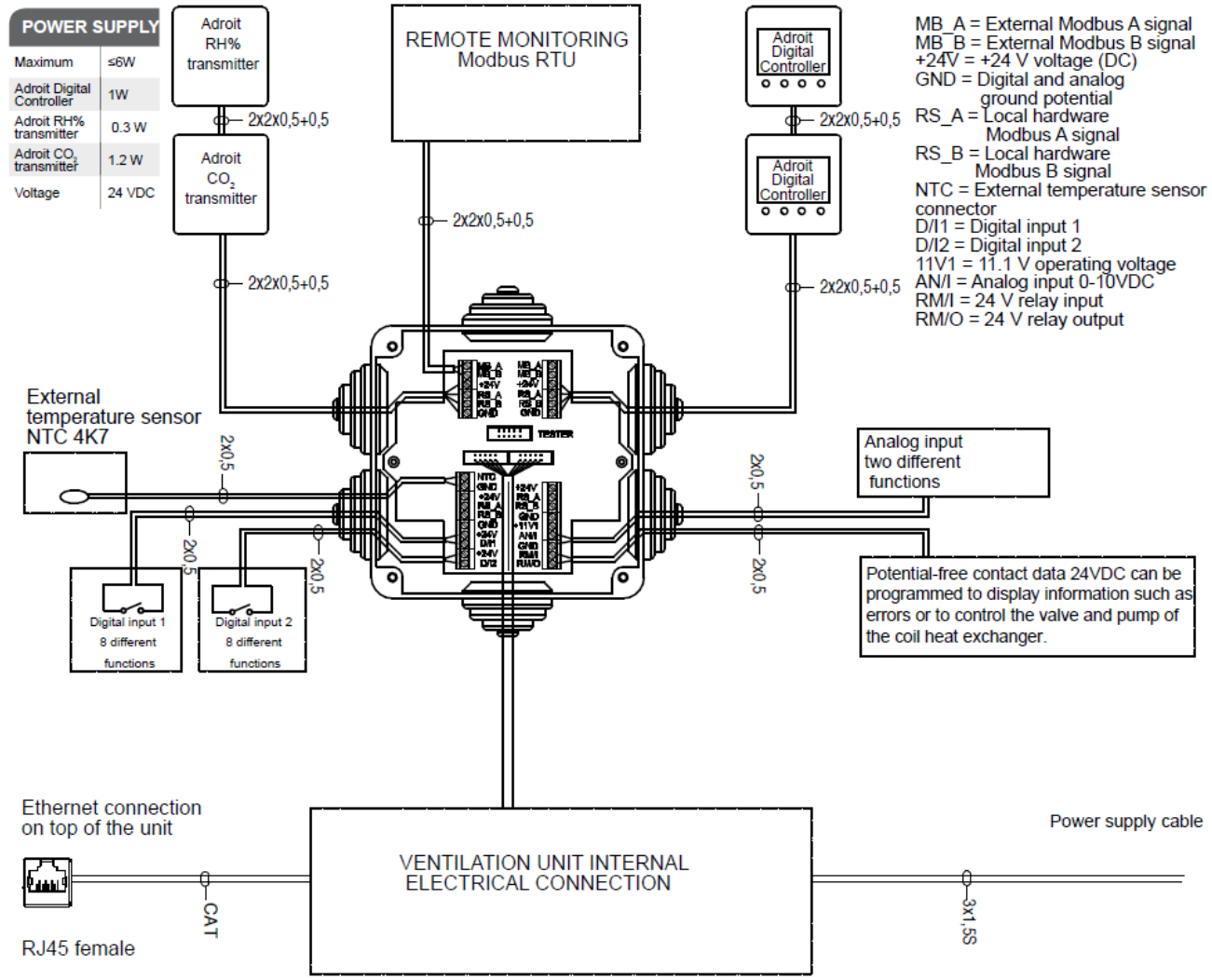

For a complete wiring diagram, see the Adroit instruction manuals.

4 CONFIGURATION VIEW AND PARTS LIST

Water circuit example diagram (additional plumbing components may be required depending on the system design and application)

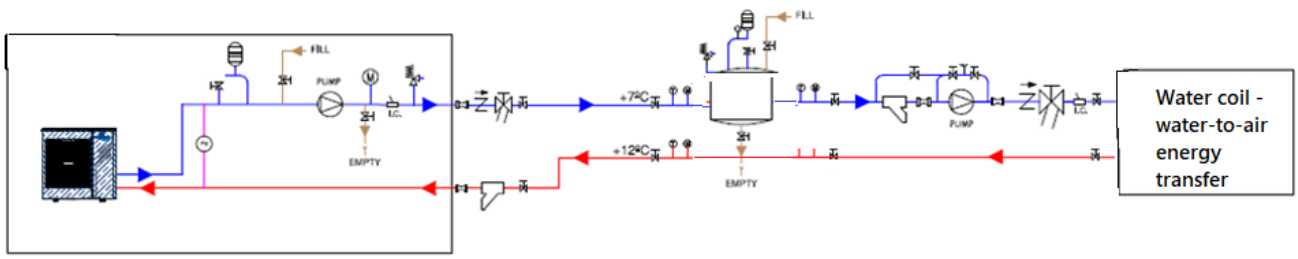

Air distribution example diagram (additional ventilation components are required to complete the whole-house system)

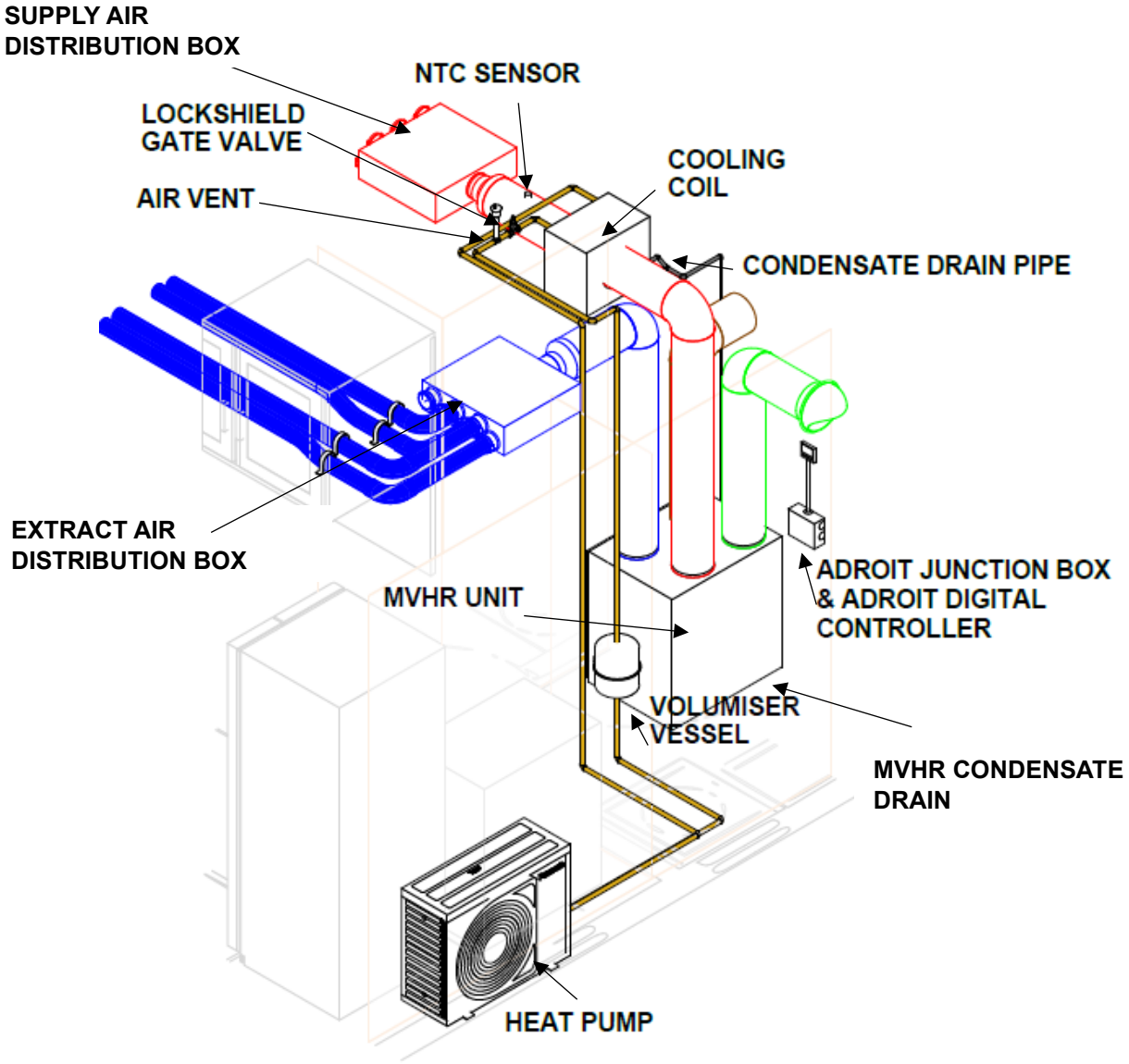

MVHR with Cooling Coil - Airflow Developments Ltd.

Comfort Cooling Kits Breakdown

Duct Cooler



This duct cooler uses a water coil to transfer energy from water to air, enhancing thermal efficiency. The fins improve heat exchange by evenly spreading water across their surface, preventing droplet formation. Designed to meet air tightness class D under EN 15727, the unit ensures that chilled air is delivered effectively without leakage, promoting energy savings and reliable performance.

Adroit Controller



An optional controller, Adroit Cloud, comes as standard with the Adroit unit. It is easy to use, featuring touch buttons on the control panel for adjusting ventilation. Profile-based control helps reduce energy consumption.

Once registered with the Adroit Cloud service, the ventilation unit can be remotely controlled via a smartphone, tablet, or computer.

Volumiser Vessel



A volumiser vessel (also called a buffer tank or hydraulic volumiser) increases the water volume in a heat-pump circuit to stabilise flow, prevent short cycling, improve heat pump efficiency, and ensure steady cooling/heating delivery when paired with an MVHR-based air distribution system.

A typical sizing consideration is 10-20 L of system volume per kW of heat pump capacity.

NTC Temperature Sensor



Additional NTC (Negative Temperature Coefficient) sensor fitted in the supply air duct, required for reading the supply air temperature downstream the water cooling coil.

Lockshield Gate Valve



The lock shield valve or flow setter is dependent on multiple factors including system size. This allows the water to flow through the coil at the correct rate so that the correct amount of heat is transferred. Each system will require a different flow setting to meet its needs.

Automatic Air Vent



It is advised to install air vents on all sealed systems involving a heat pump and heat transfer fluid. This is to remove air from the system which helps with efficiency and longevity of the system.

5 CONTROL SYSTEM

The Adroit Comfort cooling Kits include the Adroit Digital Controller (Part number: 90000610). There are two control options available, depending on the application requirements.

Option 1

- Use the wiring diagram shown below to control the magnetic vent or actuator via the Adroit unit. This hydraulic kit is not part of the Adroit comfort cooling kit but may be purchased separately.
- Wire the NTC sensor in the Adroit external connection box in NTC and GND. Fit the NTC sensor in duct, downstream from the cooling coil.

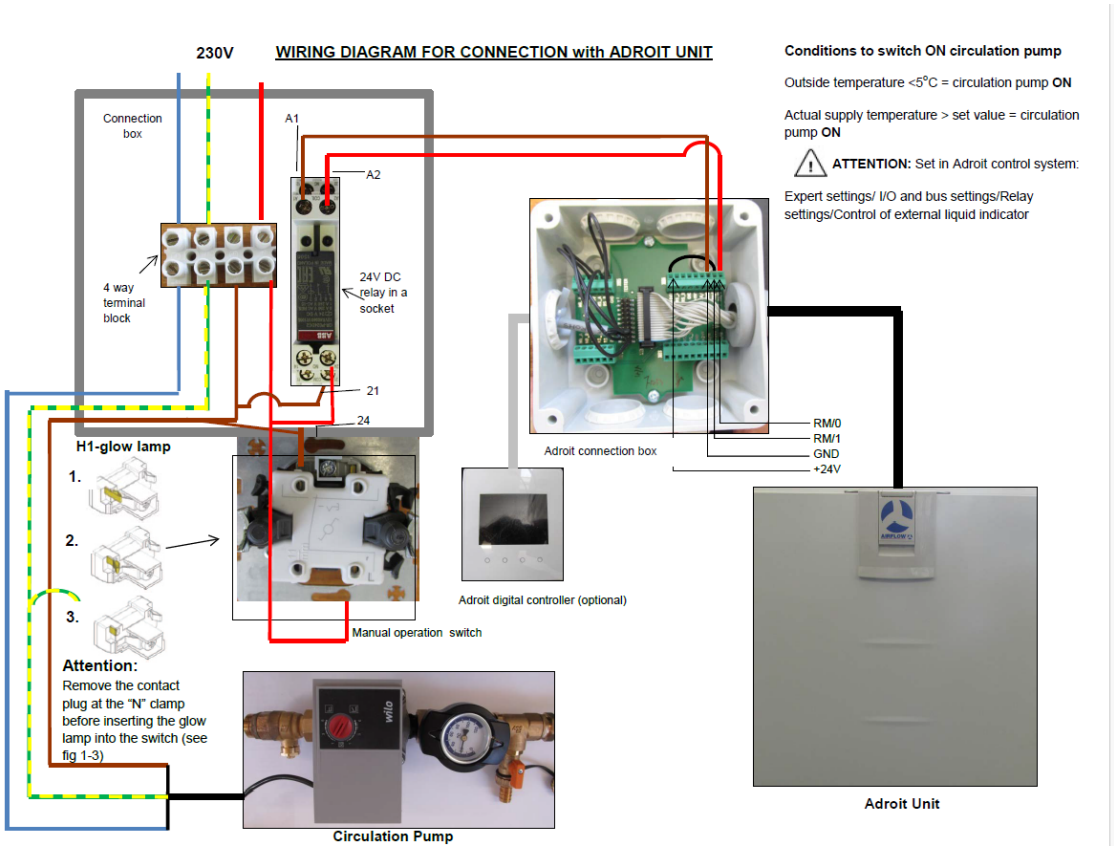

Controls Setup

Adroit Home / Cloud: Go to Expert settings / Sensor setting / Outdoor temperature sensor control set to Supply air duct radiator control.
Adroit digital controller: Expert Setting / I/O and bus settings / External sensor settings set to Supply air duct radiator control.
To view this temperature:
Adroit digital controller: Menu / Service menu / Unit information / External sensor.
Unit information / Optional sensor=External sensor.

Bypass settings now use the additional sensor temperature for control when the sensor is installed in the outdoor air duct.

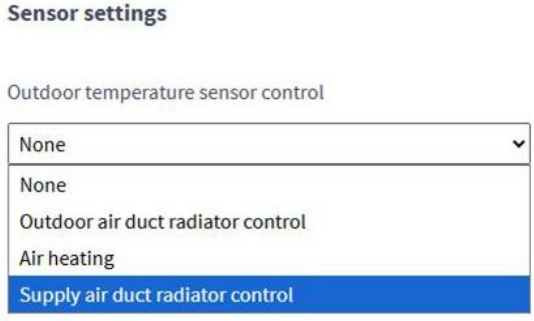

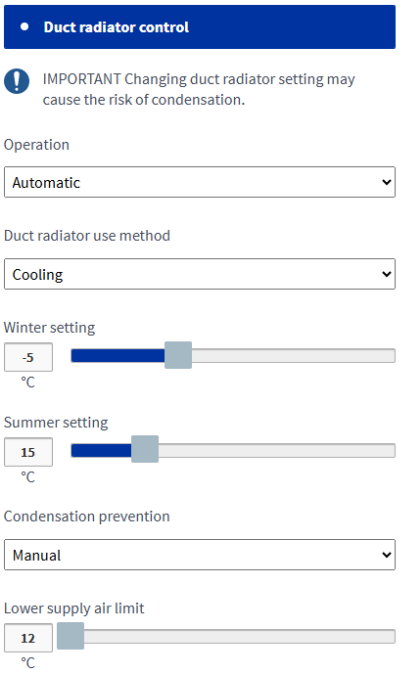

Option 2
The Adroit unit can be setup as a slave to a master such as ASHP or a BMS. In this case, the additional hydraulic kit show in Option 1 may not be necessary.
Wire the NTC sensor in the Adroit external connection box in NTC and GND. Fit the NTC sensor in duct, downstream from the cooling coil.
Controls Setup
Adroit Home / Cloud: Go to Expert settings / Sensor setting / Outdoor temperature sensor control set to Supply air duct radiator control.
Adroit digital controller: Expert Setting / I/O and bus settings / External sensor settings set to Supply air duct radiator control.
To view this temperature:
Adroit digital controller: Menu / Service menu / Unit information / External sensor.
Unit information / Optional sensor=External sensor.

Example Application Setting

Heating & Cooling using the Adroit installed with a heat pump

- Parameters to consider: airflow rate, water flow temperature, building fabric, bespoke heat loss calcs for all schemes, airtightness and high-performance insulation.
- Design the system to deliver ~1ACH when there is a call for heat/cooling.
- Reversible ASHP used in conjunction with water coil instead of DX for an eco-friendly solution.
- The Adroit acts as the thermostat via the relay settings and flips between heating/cooling and summer bypass to regulate the steady temperature of 21°C and 55% rH in the daytime.
- The away profile can be used to set a lower temperature in the evening and set the scheduler to clients' preferences.

Most of the year, the system will not need to produce more than 2kW.

- Cooling flow temp 6°C
- Heating flow temp 52°C

6 PRODUCT COMMISSIONING

COMMISSIONING THE SYSTEM
The Building Regulations 2010, Statutory Instrument Part 9, paragraph 42, imposes a requirement that testing and reporting of mechanical ventilation performance is conducted in accordance with an approved procedure. Compliance with this requirement by an assessed and registered “Competent Person” should follow a “Best Practice” process and adopt air flow measurement, Method A - The Unconditional Method - using a suitable UKAS certified measuring instrument. Generically referred to as a “Zero Pressure Air Flow Meter” or “Powered Flow Meter”. Further information on this method is detailed in NHBC Building Regulations Guidance Note G272a 10/13 and BSRIA “A Guide to Measuring Air Flow Rates” document BG46/2015.

6.1 Adroit digital controller & Adroit Cloud / Adroit Home

The Adroit units can be commissioned via the Adroit digital controller (if there is one wired in), Adroit Cloud (if the unit is registered on the Cloud) or Adroit Home (laptop connected to the unit via an ethernet cable or directly on the web browser using the IP Address of the unit if the unit is connected to the Internet).
The commissioning settings are mirrored across all user interfaces that can be used, as mentioned above.

Adroit digital controller:



The Adroit Digital Controller has four capacitive touch buttons which can be used to go through the unit settings. The control panel does not have a touch screen.

Adroit Cloud (to find out how to register an Adroit unit to the Cloud please see the instructions guidelines at www.airflow.com):

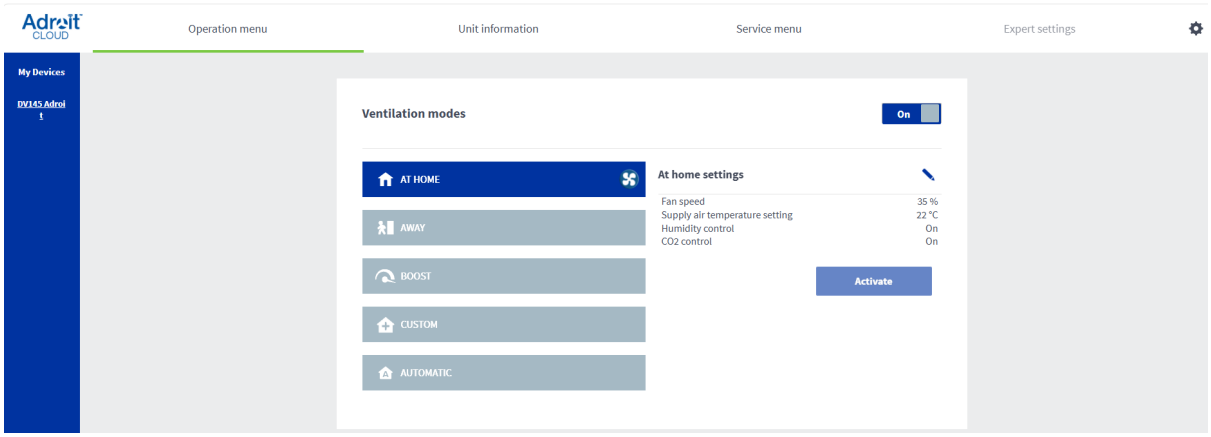

Once the additional NTC sensor is wired in accordance with 3.3 Wiring Diagram, the temperature downstream the coil can be read via “External sensor” as shown below.

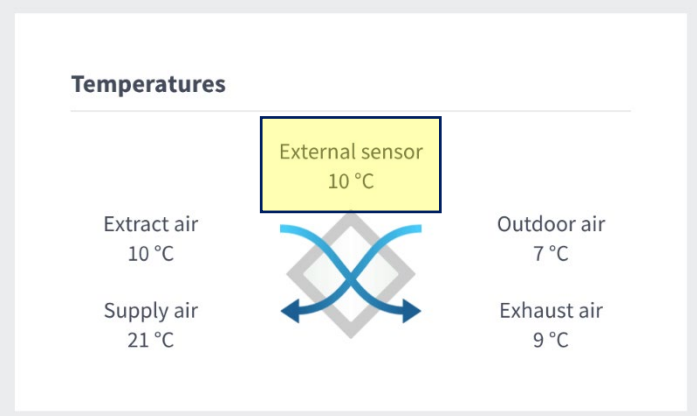

In addition, it is recommended to use the **Adroit Home** to follow the Commissioning Guidelines wizard and to download the commissioning settings via **“Download installation file.”** This file contains the unit’s commissioning parameters and can be saved for record purposes or applied to other units with similar configurations.

The commissioning sheet can also be downloaded as a PDF using the **“Download PDF”** option.

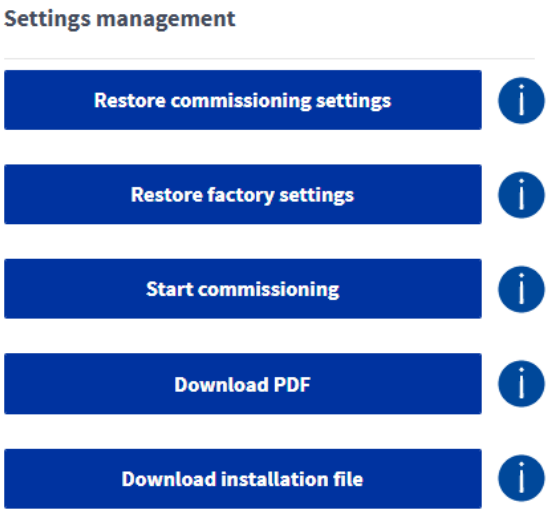

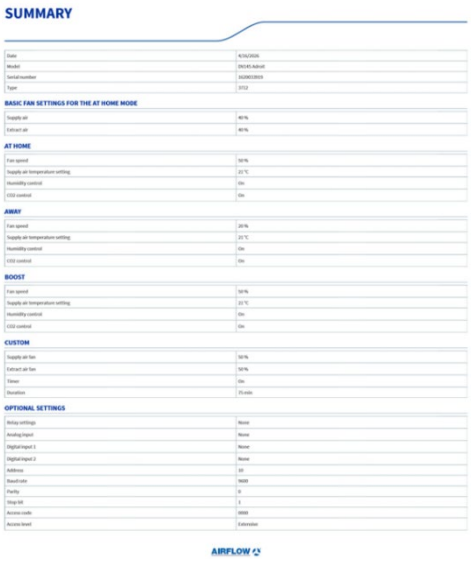

6.2 Fan speed control

Expert settings -> Fan settings

Controller interface:

SUPPLY AIR

When you want to set the system supply air settings, proceed as follows:

1. The Fan settings screen is opened.
2. Set the supply air quantity as a percentage of the maximum by using the **Plus** and **Minus** buttons. The fan speed (1/min) will change, according to the percentage value.
3. Once you have set the supply air fan settings, press the **Right arrow** button.

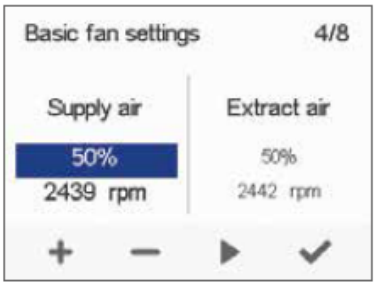

EXTRACT AIR

When you want to set the system extract air settings, proceed as follows:

1. The Fan settings screen is opened.
2. Set the extract air quantity as a percentage of the maximum by using the **Plus** and **Minus** buttons. The fan speed (1/min) will change, according to the percentage value.
3. Press the **OK** button.
4. The extract air fan speed is now set.

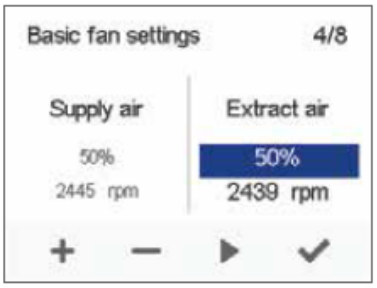

Adroit Cloud / Home

1. Select Basic fan settings and ventilation modes.



2. Set the supply air fan speed as a percentage of the maximum output by moving the blue **Supply air** slider. The fan speed (1/min) will change accordingly.
3. Measure and adjust the supply air flows from the valves.
4. Set the extract air volume as a percentage of the maximum output by moving the blue **Extract air** slider. The fan speed (1/min) will change accordingly.
5. Measure and adjust the extract air flows from the valves. Supply and extract air flow settings are now complete.
6. Record the set percentages in the commissioning sheet.

6.3 Ventilation modes

THE VENTILATION UNIT HAS FOUR VENTILATION PROFILES:

AT HOME
Use this ventilation profile when the dwelling or the premises are occupied

AWAY
Use this ventilation profile when the dwelling or premises are unoccupied, e.g. during a trip or other long absence.

BOOST
Use this profile to increase the ventilation rate, e.g. when there are more people than usual in the dwelling or local ventilation regulations dictate.

CUSTOM
Use this ventilation profile when, for example, you are making a fire in the fireplace. This profile is primarily used to create momentary overpressure in the dwelling to help elevate back spillage into the room.

CHANGING THE PROFILE

If you want to change the ventilation profile, proceed as follows:

1. Press the **Change profile** button until the desired ventilation profile icon appears on the display.
2. Wait until the main display of the ventilation profile appears.
3. The ventilation profile will now be changed.



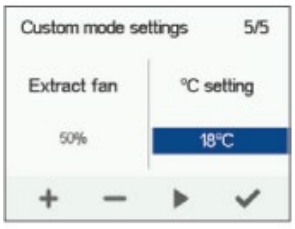

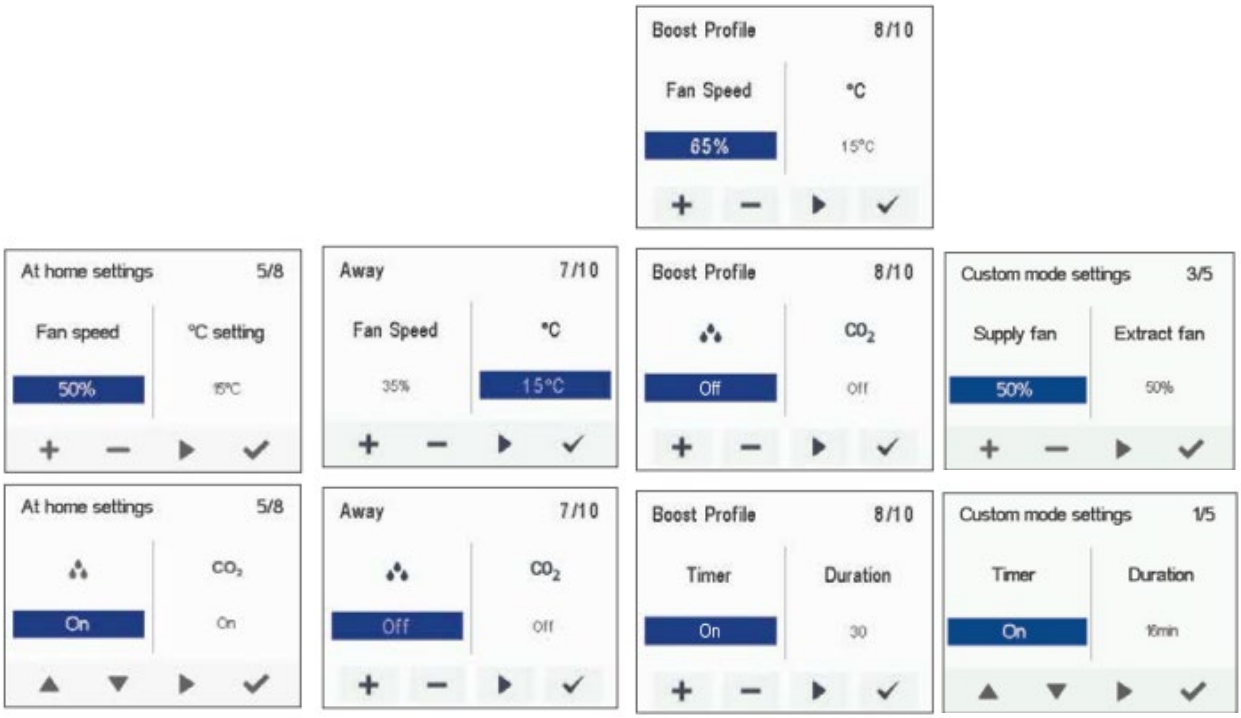

6.4 External switches or sensors – Input settings

Expert settings -> Input settings

Analog input

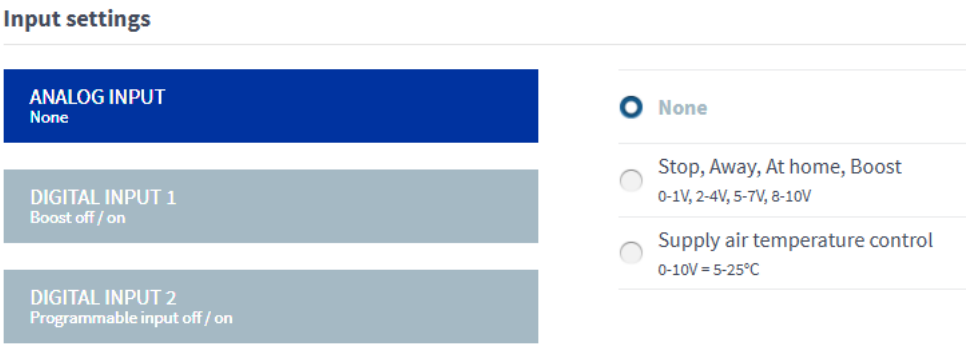

To edit the analog input of the ventilation unit:

1. Select Expert settings.
2. Select Analog input in the Input settings area.
3. Select the function of the analog input from the list.

   The options are:

   - None — The input is not enabled.
   - Stop, Away, At home, Boost, 0-1V, 2-4V, 5-7V, 8-10V — Remote monitoring uses these voltage messages in controlling the ventilation by changing the ventilation mode as required.

- **Stop, Away, At home, Boost, 0-1 V, 2-4 V, 5-7 V, 8-10 V** — Remote monitoring uses these voltage messages in controlling the ventilation by changing the ventilation mode as required.
- Supply air temperature control, 0-10V = +5°C - +25°C — Remote monitoring uses these voltage messages in controlling the ventilation by adjusting the supply air temperature.

Digital input 1 and 2

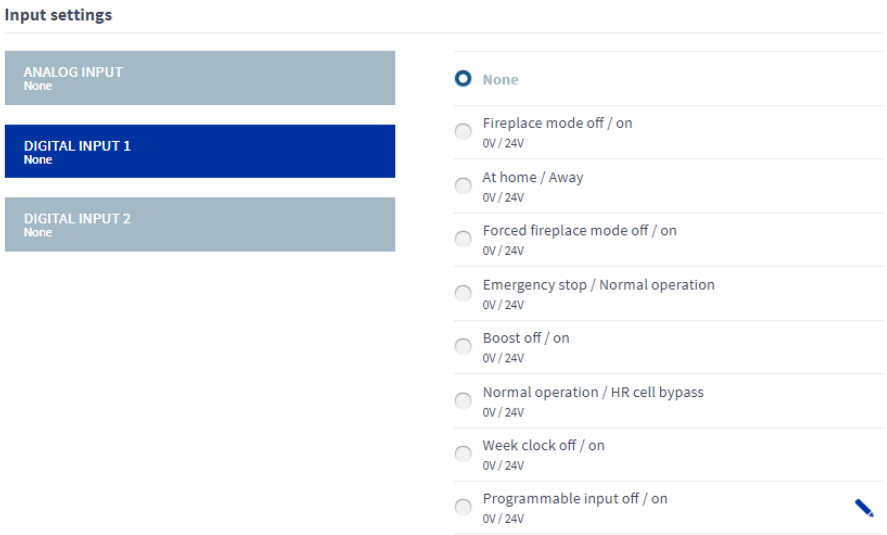

The options are:

- None — The input is not enabled.
- Fireplace mode off / on, 0V / 24V — If 24 V is fed into the digital input, the unit will use the Fireplace mode. If 0 V is fed into the digital input, the unit will use the last ventilation mode that was used.
- At home / Away, 0V / 24V — If 0 V is fed into the digital input, the unit will use the At home mode. If 24 V is fed into the digital input, the unit will use the Away mode.
- Forced fireplace mode off / on, 0V / 24V — If 24 V is fed into the digital input, the unit will use the Fireplace mode. If 0 V is fed into the digital input, the unit will use the last ventilation mode that was used.
- Emergency stop / Normal operation, 0V / 24V — If 0V is fed into the digital input, the emergency stop is activated. If 24 V is fed into the digital input, the unit will use the last ventilation mode that was used.
- Boost off / on, 0V / 24V — If 24 V is fed into the digital input, the unit will use the Boost mode for the period specified in the timer. If 0 V is fed into the digital input, the unit will use the last ventilation mode that was used.
- Normal operation / HR cell bypass, 0V / 24V — If 0 V is fed into the digital input, the automatic mode is activated. If 24 V is fed into the digital input, the bypass mode is activated.
- Week clock off / on, 0V / 24V — If 24V is fed into the digital input, the Week clock is turned on. If 0 V is fed into the digital input, the week clock is turned off.
- Programmable input off/on,0V / 24V — If 24 V is fed to the programmable input, the programmable input is enabled. If 0 V is fed to the programmable input, the programmable input is disabled. See *Programmable input*.

Programmable input

The programmable input can be used, for example, to compensate for the pressure change caused by using a vacuum cleaner. When the house automation system detects that the vacuum cleaner is turned on, it sends a message to the digital output that controls the unit in accordance with the values configured for the programmable input.
Note: The unit has two physical digital inputs. Only one of the inputs is programmable.

To programme the input:

1. Select Expert settings.
2. Select Digital input 1 or 2 in the Input settings area.

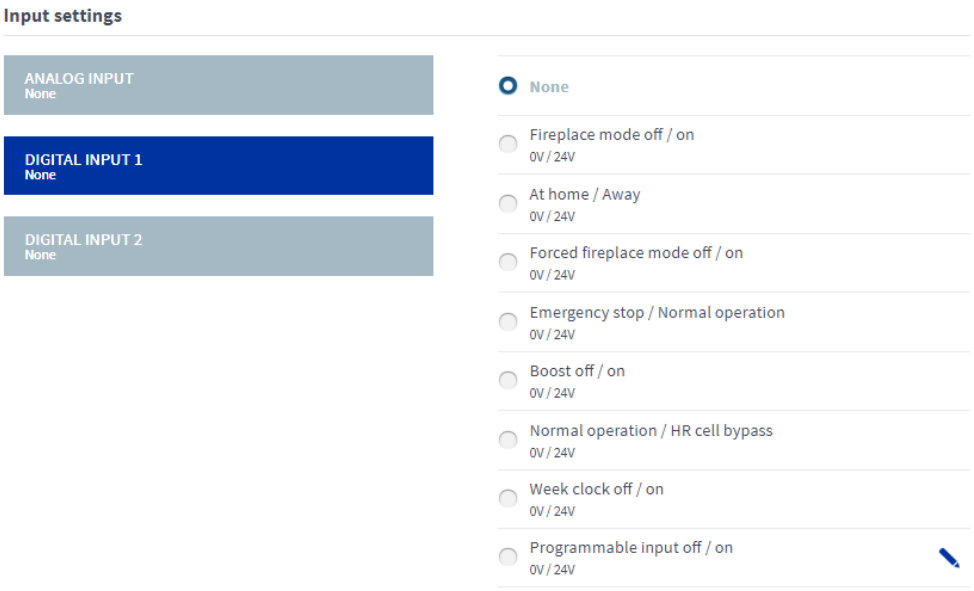

3. Select the value Programmable input, 0 V / 24 V for the desired digital input.
4. Select the Edit button for the programmable input:

   The programmable input will open in the editing mode.

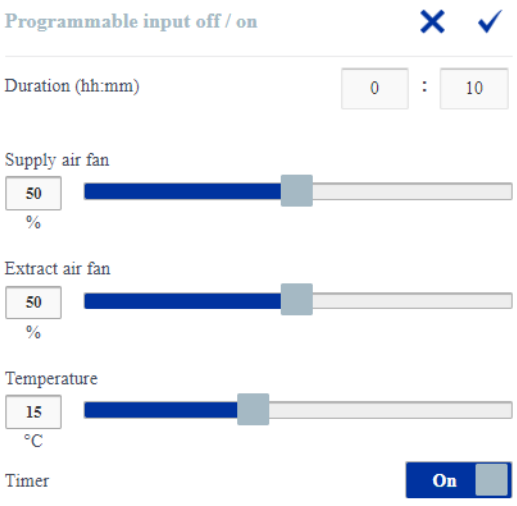

5. Set the duration of the programmable input by entering the hours and minutes in the Duration (hh:mm) fields.



6. Set the supply air fan speed as a percentage of the maximum by using the blue slider.



7. Set the extract air fan speed as a percentage of the maximum by using the blue slider.



8. Turn the timer on or off by using the On/Off button on the right side of the Timer text.
   - When the value is On, the timer is turned on.



   - When the value is Off, the timer is turned off.

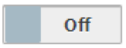

9. All settings of the programmable input have now been configured.

6.5 Grant remote access

You can grant access to someone else, such as a competent qualified service engineer, to remote access of the ventilation unit via the Adroit Cloud service. Remote access rights can be granted to several people. The contact details of the engineers who have been granted remote access rights to the unit are listed at the bottom of the Special functions page.

To grant remote access rights:

1. Select Special functions
2. Enter the email address of the person to whom you wish to grant remote access rights in the field in the Grant remote access area.

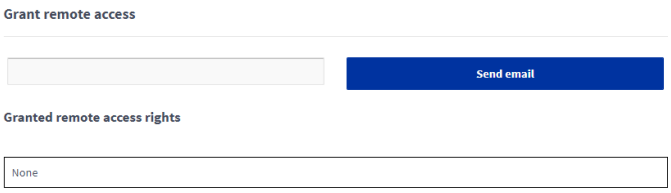

3. Select Send email.

   The system will send a link to this email address that the recipient can use to access the ventilation unit remotely by logging into their own Cloud username and password.

4. To remove granted remote access rights, enter the email address of the engineer to be removed and select Remove.

7 MAINTENANCE

7.1 Filters

MVHR (Mechanical Ventilation with Heat Recovery) units require regular filter maintenance (cleaning or replacement). The Airflow MVHR units have been designed to facilitate convenient access to the filters with easy maintenance in mind. The Airflow filters are tested and compliant with ISO 16890.

Filter replacement reminder
The safety switch (dead man switch) automatically turns off the power when the door of the unit is opened.
Always disconnect the power plug before starting the ventilation unit maintenance.

FILTER SETTINGS

If you want to browse through the filter settings, proceed as follows:

1. Select **Settings > Filters.**
2. Press the **OK** button.
3. The Filters status summary screen is opened.
4. This screen contains the following information:
   - **Filters changed** — Indicates the date when the filter was last replaced.
   - **Next reminder** — Indicates the date when a reminder to replace the filter will next be shown.
   - **Reminder interval** — Indicates the filter replacement interval in months.

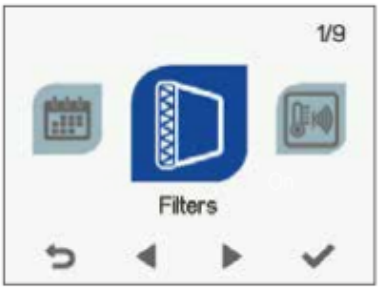

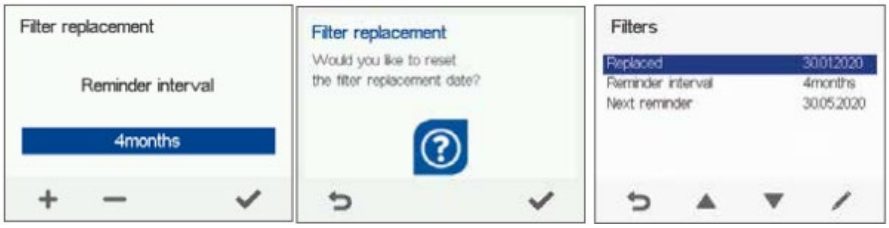

For furher information on Filter Replacement Process, please see the guidelines against the product Downloads at www.airflow.com

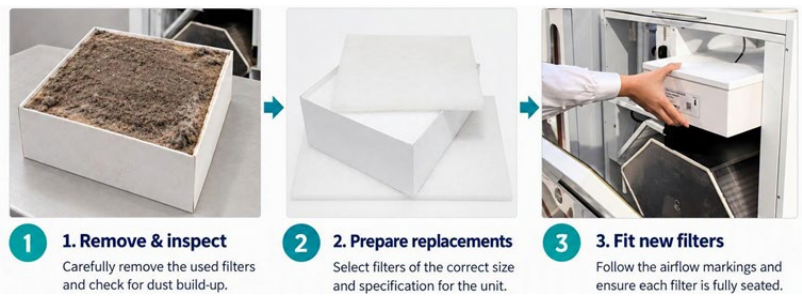

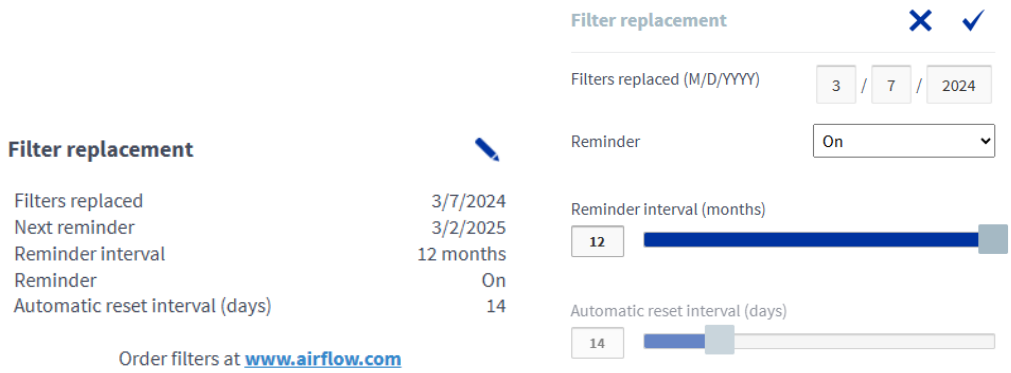

7.2 Heat exchanger

The counter-flow heat exchangers installed in these units have no movable parts or metal connections; therefore, very little maintenance is required. It is recommended that the heat exchanger core to be cleaned on a regular basis. This will keep the efficiency of the unit at a high level. (Recommend inspection of core when filter maintenance/change takes place).

Note: Handle the heat recovery cell carefully! Do not handle the heat recovery cell by its thin membrane airflow dividers as they can be easily damaged.

7.3 Fans

Check the cleanliness of the fans when carrying out the filters and heat recovery cell maintenance. Clean the fans, if necessary. You can clean the fan blades with compressed air or by brushing them gently. Do not remove or move the fan blade balancing pieces.

- ✓ Only by competent personnel Isolate the electric supply to unit
- ✓ Clean fans with soft brush or vacuum

Note: The fans can be easily damaged and should be handled carefully. We recommend that you clean the fans in place where they are mounted.

7.4 Condensate drain

The condensate drainage may get clogged by dirt and dust particles contained in the exhaust air. Check the drain line operation by filling the drain under the unit with water, clean the traps and drainpipe if necessary (4 times a year).

7.5 Water Coil

The heat exchanger must be cleaned regularly in order to retain the best performance from the heater/cooler. The cleaning interval depends on the air cleanliness and on the correct maintenance of the whole system.
The heat exchanger is easily accessible for cleaning when the lid of the heater/cooler is removed. Whole heater/cooler can be cleaned by compressed air, water or steam.

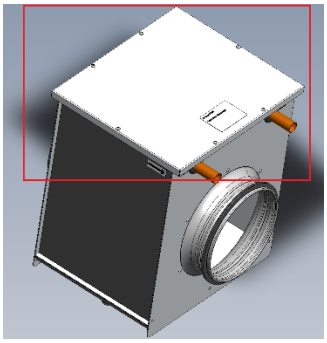

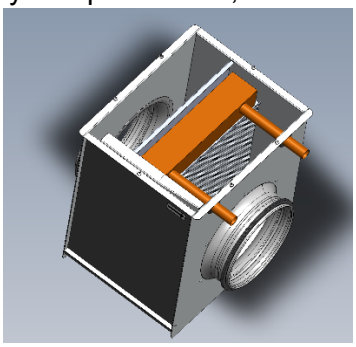

Remove the screws and take off the cover as shown below. Clean the coil and condensate drain pan.

8. TROUBLESHOOTING

FAULT	CAUSE	MEASURES
Message on the user interface: Extract fan stopped	The extract air fan has stopped.	Make sure that the fan is not running. The fan cabling and operation must be checked, and if necessary, the fan must be replaced. Contact the service centre.
Message on the user interface: Supply fan stopped	The supply air fan has stopped.	Make sure that the fan is not running. The fan cabling and operation must be checked, and if necessary, the fan must be replaced. Contact the service centre.
Message on the user interface: Heat recovery cell has frozen	The heat recovery cell has become excessively cold.	Conduct a manual defrost through the controller (Service menu > Cell defrost). Try to discover why the heat recovery cell is frozen.
Message on the user interface: Temperature sensor 1/2/3/4/5	The temperature sensor indicated on the user interface is damaged.	The sensor installation must be checked, and if required, the sensor must be replaced. Contact the service centre.
Message on the user interface: External sensor	The external temperature sensor is damaged.	The sensor installation must be checked, and if required, the sensor must be replaced. Contact the service centre.
Message on the user interface: Post-heater	The post-heater does not heat.	The heater installation must be checked, and if required, the heater must be replaced. Contact the service centre.
Message on the user interface: Bus fault	Problems with the data transfer bus.	Make sure that the Modbus bus is connected correctly, and that the devices connected to it are properly functioning.
The ventilation unit is not working; the controller is not working.	Power input to the unit is lost.	Check: • Fuse in the fusebox • Fuse in the unit • Check isolation switch is in the ON position.
The ventilation unit is working, but the controller is not working.	Either the controller 24 VDC power is lost, or the controller is damaged.	Check the cables from the unit to the controller. Contact the service centre if necessary.

9. DECLARATION OF CONFORMITY

Please visit our website at airflow.com for additional compliance information.
The CE and UKCA Declarations of Conformity are available within the Adroit instruction manuals or can be requested directly by emailing info@airflow.com.
Regarding the plumbing components supplied in the kit, WRAS approval is not required for heating or cooling systems, as these systems operate in a closed loop and are isolated from the potable water supply.

Compliance with Approved Document O of the Building Regulations-Overheating

✔ Mechanical cooling. A cooling coil connected to a heat pump is considered active cooling via supply air.

✔ The Adroit MVHR combined with a water-cooling coil fed by an outdoor heat pump can be used to comply with Part O (England), via the TM59 Dynamic Thermal Modelling route, not the Simplified Method.

✔ Modelling the Adroit Comfort Cooling Kits in TM59 – the same process as the cooling modules offered in the market, but with a water coil instead of a refrigerant module.

- A chilled-water coil
- Connected to a heat pump (COP/EER)
- Coil cooling capacity (kW)
- Air flow rate of the Adroit MVHR
- Supply air temperature range
- Cooling setpoint
- Night cooling

✔ Supply cooled air in bedrooms (habitable rooms)

✔ Internal gains and glazing/shading strategy

10. WARRANTY

(Airflow Terms and Conditions of Supply for Business Contracts can be found at www.airflow.com)

The goods are subject to mandatory commissioning. Commissioning may only be carried out by a qualified person.

The manufacturer guarantees the quality of goods for 24 months from the date of commissioning, but no longer than 26 months from the date of delivery specified in the Purchase Contract.

The warranty covers only defects in components, materials and function of the goods.

The warranty does not cover defects caused by improper handling, transport, improper storage, non-observance of the operating instructions, incorrect installation, improper intervention, improper use, neglect of the prescribed mandatory maintenance (e.g. failure to replace dirty filters, etc.), non-compliance with the requirements for connected equipment supplied by a third party (e.g. The warranty also does not cover normal wear and tear.)

For the Adroit MVHR unit warranty conditions, see the Adroit instruction manual.

11. DECOMMISSIONING AND DISPOSAL

DISPOSAL OF THE VENTILATION UNIT



Do not dispose of electronic devices with household waste. Follow local laws and regulations on safe and ecological disposal of the product.

These fan units consist mainly of steel, iron, aluminium, copper, electrical insulation materials, cables, wires, and plastic.

Complete fans and parts that are at end of life due to wear and tear, corrosion, fatigue and or other effects that cannot be discerned must be disposed of in the correct manner conforming to local and / or international guidelines and regulations. Intended or unintended further use of worn parts, e.g., impellers and bearings etc. can result in danger to persons, the environment and fan unit.

Packaging materials should be disposed of in the correct manner conforming to local and / or international guidelines and regulations. Some packaging can be re-cycled. In this case seek advice from a qualified waste management company.

Complete recycling instructions of the MVHR unit can be found online at airflow.com.

Airflow Developments Ltd shall not be liable for any loss, injury, or other consequential damage, in the event of a failure of the equipment, arising from, or in connection with, the equipment excepting only that nothing in this condition shall be construed as to exclude or restrict liability for negligence. Full details at airflow.com/terms.

This warranty does not in any way affect any statutory or other consumer rights.

UK Head-Office
AIRFLOW DEVELOPMENTS Limited
Aidelle House, Lancaster Road,
Cressex Business Park.
High Wycombe.
Buckinghamshire.
HP12 3QP
United Kingdom.

Tele: +44 (0) 1494 525252
Fax: +44 (0) 1494 461073
Email: info@airflow.com
Web: airflow.com

Germany
Airflow Lufttechnik GmbH
Wolbersacker 16
53359 Rheinbach

Tele: +49 (0) 222 69205 0
Fax: +49 (0) 222 69205 11
Email: info@airflow.de
Web: airflow.de
Germany.

Czech Republic
AIRFLOW LUFTTECHNIK GmbH
o.s. Praha Hostýnská 520
108 00 Praha 10
Malešlce
Tele: +42 (0) 2 7477 2230
Fax: +42 (0) 2 7477 2370
Email: info@airflow.de
Web: airflow.cz.
Czech Republic.

© Airflow • We reserve the right to make changes without prior notice

80001819 - Issue 4 11/26